HeatForce

96234627 HEATF2 1X36W T26 IHF L000

IP65			850°C

HeatForce

A high performance IP65 dust and moisture resistant luminaire for high ambient temperature locations (up to 65°C). For 1 x 36W Light Source: 1 x T26 / 36W lamp(s) with electronic - fixed output circuit. Class I electrical. Canopy in light grey glass fibre reinforced polyester. Diffuser in polycarbonate with internal prisms. For surface or suspended mounting. Quick-fix installation brackets are supplied for surface mounting, optional accessory kits are avalable to help with other mounting options.

Dimensions: 1294 x 167 x 125 mm
Luminaire input power: 35.5 W
Weight: 2.47 kg

TLG_XFRC_F_COL4.jpg

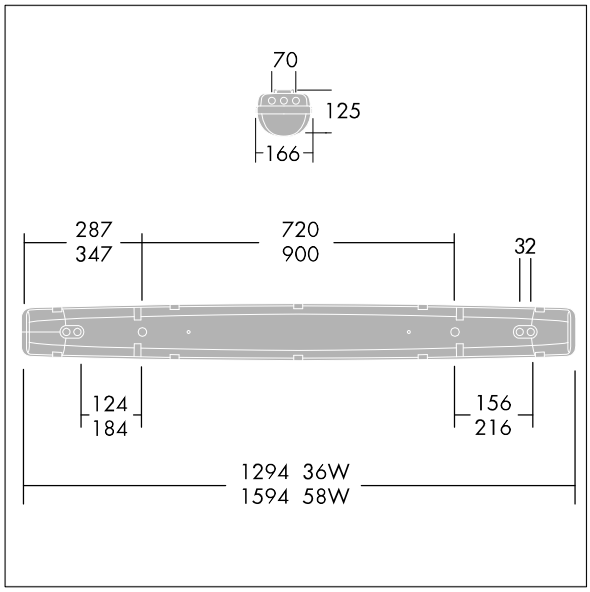

TLG_XFRC_M_TWLDT26IMPC.wmf

All values marked with an * are rated values. Unless stated otherwise, the values apply to an ambient temperature of 25°C.

Thorn Lighting is constantly developing and improving its products. The right is reserved to change specifications without prior notification or public announcement.
© Thorn Lighting