Areaflood Pro

96644567 <AFP L 120L50-740 A6 BS 3550 CL2 GY

ISO 9223 C5	IP66		IK08					Ta -25 +35

Areaflood Pro

A compact, lightweight, general purpose LED area floodlight. With large body. driving 120 LEDs at 500mA with asymmetrical 60° light distribution. IP66, IK08, Class II electrical. Body: die-cast aluminium (EN AC-44300), Light grey 150 sanded textured (close to RAL9006).. Enclosure: mm thick toughened glass. Reversable mounting stirrup supplied, Complete with 4000K LED.

Not compatible with UrbaSens systems.

Dimensions: 658 x 490 x 139 mm
Luminaire input power: 177 W
Luminaire luminous flux: 28528 lm
Luminaire efficacy: 161 lm/W
Weight: 18.39 kg
Scx: 0.073 m²

TLG_AFLP_F_LARGEPDB.jpg

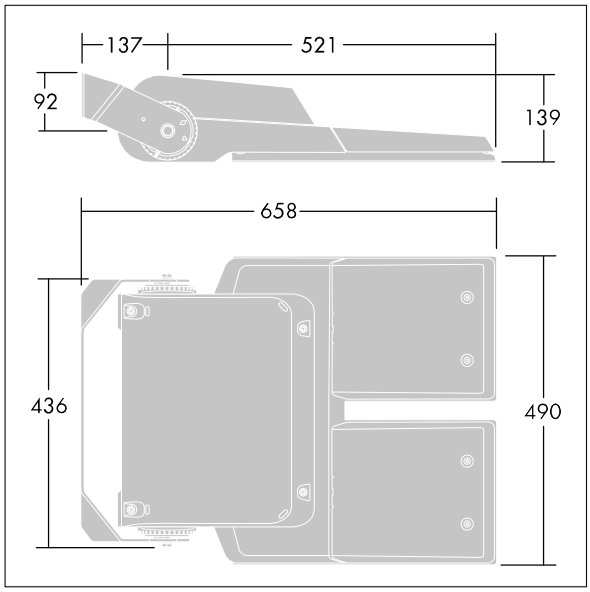

TLG_AFLP_M_LGE.wmf

All values marked with an * are rated values. Thorn uses tried and tested components from leading suppliers, however there may be isolated instances of technology-related failures of individual LEDs during the rated product lifetime. International standards set the tolerance in initial flux and connected load at ±10%. Unless stated otherwise, the values apply to an ambient temperature of 25°C.

Thorn Lighting is constantly developing and improving its products. The right is reserved to change specifications without prior notification or public announcement.
© Thorn Lighting