Plurio

96668649 PLD F 18L105-740 R/S BS 3550 T60 CL2 GY

ISO 9223 C5		IP66	IK08					T_a25

Plurio

Plurio Direct: A decorative post-top LED lantern with radially symmetric distribution. LED driver with 18 LEDs driven at 1,05A. Class II electrical, IP66, IK08. Base: cast aluminium, powder coated silver-grey. Canopy: flat shape, aluminium, textured silver-grey. Diffuser: UV stabilised, clear polycarbonate with anti-glare prisms. Direct, lens based optic with internal reflector. Equipped with 50% power reduction circuit, effective 3 hours before and 5 hours after a calculated midnight. It can be deactivated at installation with an easily accessible internal switch. Complete with 4000K LED. Post top mounting to Ø60mm column.

Upward lighting emissions below 1%.

Dimensions: Ø601 x 487 mm
Luminaire input power: 60 W
Luminaire luminous flux: 6645 lm
Luminaire efficacy: 111 lm/W
Weight: 11 kg
Scx: 0.167 m²

TLG_PLRL_F_DFC_GY.jpg

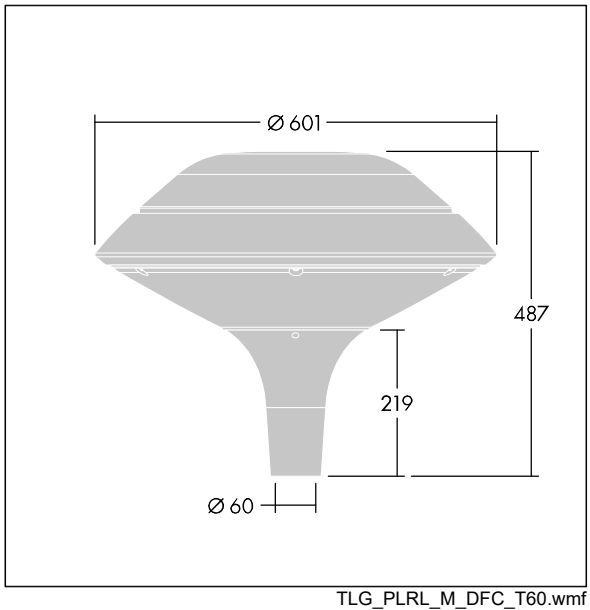

TLG_PLRL_M_DFC_T60.wmf

This product contains a light source of energy efficiency class D.

All values marked with an * are rated values. Thorn uses tried and tested components from leading suppliers, however there may be isolated instances of technology-related failures of individual LEDs during the rated product lifetime. International standards set the tolerance in initial flux and connected load at ±10%. Unless stated otherwise, the values apply to an ambient temperature of 25°C.

Thorn Lighting is constantly developing and improving its products. The right is reserved to change specifications without prior notification or public announcement.
© Thorn Lighting

Plurio

96668649 PLD F 18L105-740 R/S BS 3550 T60 CL2 GY

Thorn Lighting is constantly developing and improving its products. The right is reserved to change specifications without prior notification or public announcement.
© Thorn Lighting