96206429 EYE BE 1X28W TC-DDEL HF E3 OP L BL

IP65 | IK10 | 960°C | T_a 0 +25

Round, vandal resistant bulkhead luminaire for 1x28W Light Source: 1 x TC-DDEL / 28W lamp(s) with Combined HF & EM SC ballast and 3 hour emergency manual test. Class I electrical, IP65, IK10. Body, large size, in die-cast aluminium (LM6), powder coated black. Diffuser in opal polycarbonate. With die-cast aluminium bezel feature. To be wall or ceiling mounted, electrical connection via 4 x 2 x 2.5mm² terminal block. Lamps to be ordered separately.

Dimensions: Ø340 x 155 mm
Luminaire input power: 26 W
Weight: 2.9 kg

TLG_EYKN_F_LGBEZBLKOP.jpg

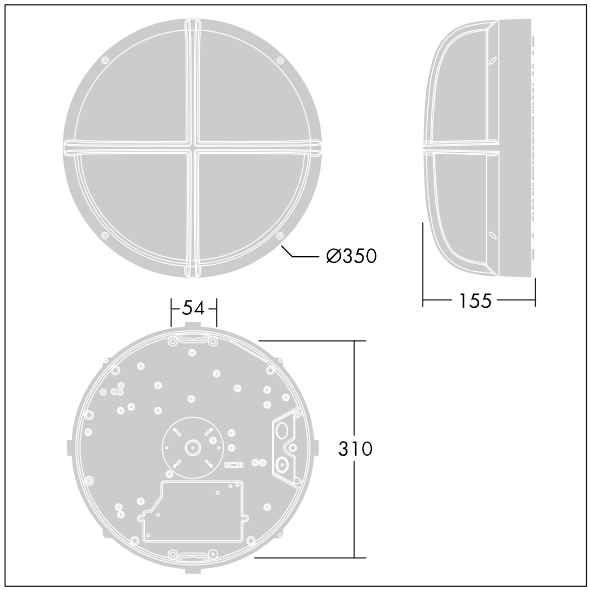

TLG_EYKN_M_LGE.wmf

All values marked with an * are rated values. Unless stated otherwise, the values apply to an ambient temperature of 25°C.

Thorn Lighting is constantly developing and improving its products. The right is reserved to change specifications without prior notification or public announcement.
© Thorn Lighting

96206429 EYE BE 1X28W TC-DDEL HF E3 OP L BL

Thorn Lighting is constantly developing and improving its products. The right is reserved to change specifications without prior notification or public announcement.
© Thorn Lighting