FleXity

96271120 <FLEX 24L105-740 WSC-S BP CL1 W5 T76 ANT

ISO 9223 C3	IP66	IK09					T_a -20 +25

FleXity

A modern, discreet and versatile post top LED lantern with a symmetric distribution. LED driver Programmable driving 24 LEDs at 1,05A. Class I electrical, IP66, IK09. Canopy and base: die-cast aluminium (EN AC-46100) powder coated dark grey (close to RAL7043). Enclosure: clear polycarbonate. Equipped with power reduction circuit, effective 3 hours before and 5 hours after a calculated midnight. Complete with 4000K LED. Post top mounting to Ø76mm column, maximum spigot length 75mm. Pre-wired with 5m cable.

Surge protection: 10kV single pulse common mode and 8kV multipulse common mode and 6kV multipulse differential mode. If permanent DALI system is connected, 6kV multipulse common and differential mode.

Dimensions: 370 x 430 x 290 mm
Luminaire input power: 84 W
Luminaire luminous flux: 8824 lm
Luminaire efficacy: 105 lm/W
Weight: 4.7 kg
Scx: 0.038 m²

TLG_FLEX_F_D76PDB.jpg

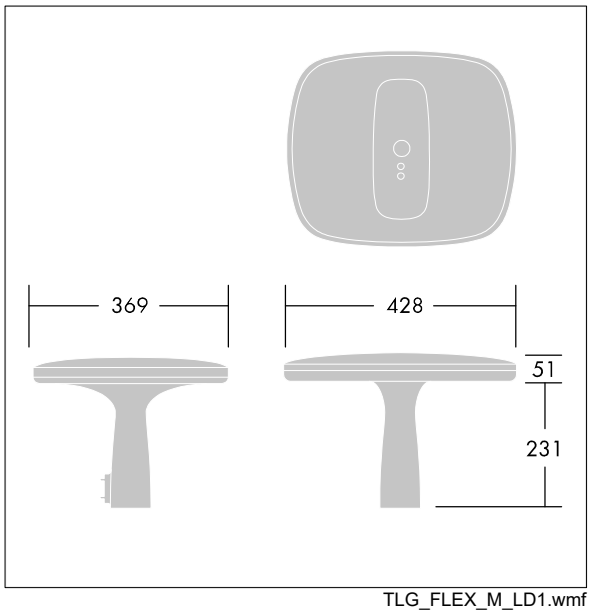

TLG_FLEX_M_LD1.wmf

All values marked with an * are rated values. Thorn uses tried and tested components from leading suppliers, however there may be isolated instances of technology-related failures of individual LEDs during the rated product lifetime. International standards set the tolerance in initial flux and connected load at ±10%. Unless stated otherwise, the values apply to an ambient temperature of 25°C.

Thorn Lighting is constantly developing and improving its products. The right is reserved to change specifications without prior notification or public announcement.
© Thorn Lighting

FleXity

96271120 <FLEX 24L105-740 WSC-S BP CL1 W5 T76 ANT

Thorn Lighting is constantly developing and improving its products. The right is reserved to change specifications without prior notification or public announcement.
© Thorn Lighting