CiviTEQ

96643185 CQ 12L70 740 EWC BS 3550 CL2 M60 GY-S

ISO 9223 C5		IP66	IK08					T_a25

CiviTEQ

A small size LED road lighting lantern with 12 LEDs driven at 700mA with Extra Wide Street & Comfort optic. Electronic, fixed output control gear. Class II electrical, IP66, IK08. Housing: die-cast aluminium (EN AC-44300), Light grey 150 sanded textured (close to RAL9006). Enclosure: toughened flat glass. Screws: stainless steel, Ecolubric® treated. Supplied with Ø60mm spigot adaptor which can be fitted for post-top (0°/5°/10° tilt) or side-entry (-20°/-15°/-10°/-5°/0° tilt). Equipped with 50% power reduction circuit, effective 3 hours before and 5 hours after a calculated midnight. It can be deactivated at installation with an easily accessible internal switch. Complete with 4000K LED. Surge protection: 10kV single pulse common mode and 8kV multipulse common mode and 6kV multipulse differential mode. If permanent DALI system is connected, 6kV multipulse common and differential mode.

TLG_CTEQ_F_SMTP36LEDPDB.jpg

Dimensions: 390 x 230 x 133 mm
Luminaire input power: 28 W
Luminaire luminous flux: 3820 lm
Luminaire efficacy: 136 lm/W
Weight: 5.7 kg
Scx: 0.077 m²

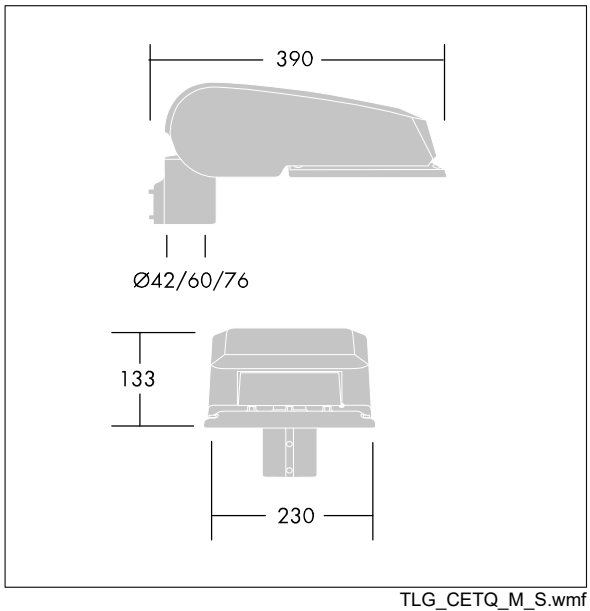

TLG_CETQ_M_S.wmf

This product contains light sources of energy efficiency class D.

All values marked with an * are rated values. Thorn uses tried and tested components from leading suppliers, however there may be isolated instances of technology-related failures of individual LEDs during the rated product lifetime. International standards set the tolerance in initial flux and connected load at ±10%. Unless stated otherwise, the values apply to an ambient temperature of 25°C.

Thorn Lighting is constantly developing and improving its products. The right is reserved to change specifications without prior notification or public announcement.
© Thorn Lighting

CiviTEQ

96643185 CQ 12L70 740 EWC BS 3550 CL2 M60 GY-S

Thorn Lighting is constantly developing and improving its products. The right is reserved to change specifications without prior notification or public announcement.
© Thorn Lighting