EP 445

96629550 EP445 24L70-730 CD-A BPS CL2 W5M MTP

IP66 | IK08

EP 445

A 19th Century style lantern with 24 LEDs with switchable drive current and Street & Comfort optic. Post top mounting. Equipped with power reduction circuit, profile selected by rotary switch. Class II electrical, IP66, IK08. Body: die-cast aluminium, painted black (close to RAL9005) textured. Enclosure: 4mm thick extra clear glass. Pre-wired with 5m cable. Complete with 3000K LED

Dimensions: 436 x 436 x 695 mm
Luminaire input power: 53 W
Weight: 9.7 kg
Scx: 0.19 m²

TLG_EP44_F_MTP.jpg

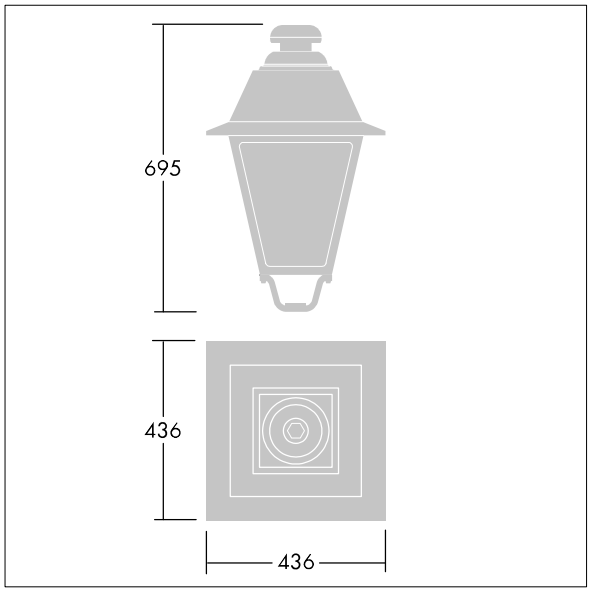

TLG_EP44_M_MTP.wmf

This product contains a light source of energy efficiency class D.

All values marked with an * are rated values. Thorn uses tried and tested components from leading suppliers, however there may be isolated instances of technology-related failures of individual LEDs during the rated product lifetime. International standards set the tolerance in initial flux and connected load at ±10%. Unless stated otherwise, the values apply to an ambient temperature of 25°C.

Thorn Lighting is constantly developing and improving its products. The right is reserved to change specifications without prior notification or public announcement.
© Thorn Lighting

EP 445

96629550 EP445 24L70-730 CD-A BPS CL2 W5M MTP

Thorn Lighting is constantly developing and improving its products. The right is reserved to change specifications without prior notification or public announcement.
© Thorn Lighting