Raze Architectural

96631721 RAA L 1L50-830 HFX 6K MSF ANT

ISO 9223 C5 | IP66 | IK10

Raze Architectural

A compact, Surface mounted, LED wall grazer, incorporating Thorn's Flat beam® technology. 1 LED driven at 500mA. Integral DALI dimmable LED driver included. Class II electrical, IP66, IK08. Housing: die-cast aluminium (EN44300, compatible with seaside installation), powder coated, textured anthracite (close to RAL7043). Bowl: UV stablised polycarbonate, semi-frosted. Fasteners: stainless steel. Complete with 3000K LED.

S version driver capable of supplying up to three luminaires.
MSF variant with adjustable tilt up to ±15°.
MWA variant flush mounting.
6kV surge protection as standard. Pre-wired.

Dimensions: 204 x 220 x 148 mm
Luminaire input power: 21 W
Luminaire luminous flux: 1688 lm
Luminaire efficacy: 80 lm/W
Weight: 2.85 kg

TLG_RAZA_F_L_MSF_PDB.jpg

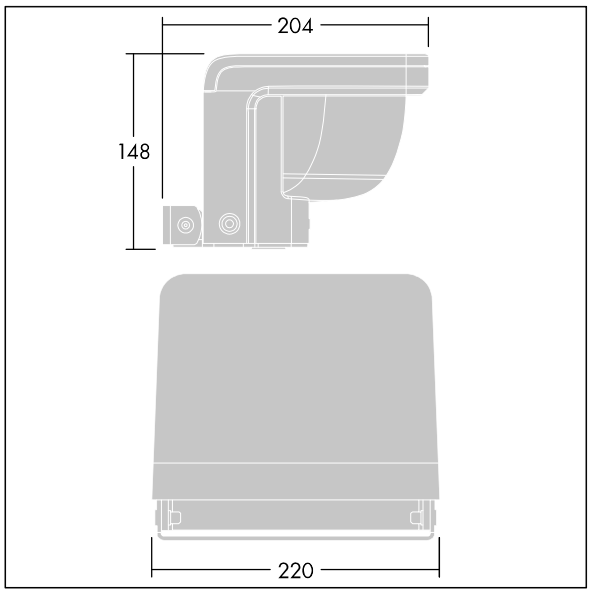

TLG_RAZA_M_L_MSF.wmf

This product contains a light source of energy efficiency class E.

All values marked with an * are rated values. Thorn uses tried and tested components from leading suppliers, however there may be isolated instances of technology-related failures of individual LEDs during the rated product lifetime. International standards set the tolerance in initial flux and connected load at ±10%. Unless stated otherwise, the values apply to an ambient temperature of 25°C.

Thorn Lighting is constantly developing and improving its products. The right is reserved to change specifications without prior notification or public announcement.
© Thorn Lighting

Raze Architectural

96631721 RAA L 1L50-830 HFX 6K MSF ANT

Thorn Lighting is constantly developing and improving its products. The right is reserved to change specifications without prior notification or public announcement.
© Thorn Lighting