Raze Architectural

96632094 RAA S 1L35-830 NG 6K MWA ANT

ISO 9223 C5	IP66	IK08	III			

Raze Architectural

A compact, wall mounted, LED wall grazer, incorporating Thorn's Flat beam® technology. 1 LED driven at 350mA. No driver included. Class III electrical, IP66, IK08. Housing: die-cast aluminium (EN44300, compatible with seaside installation), powder coated, textured anthracite (close to RAL7043). Bowl: UV stablised polycarbonate, frosted. Fasteners: stainless steel. Complete with 3000K LED.

S version driver capable of supplying up to three luminaires.
MSF variant with adjustable tilt up to ±15°.
MWA variant flush mounting.
6kV surge protection as standard. Pre-wired with 2m cable.

Dimensions: 86 x 70 x 110 mm
Luminaire input power: 6 W
Luminaire luminous flux: 350 lm
Luminaire efficacy: 58 lm/W
Weight: 0.56 kg

TLG_RAZA_F_S_PDB.jpg

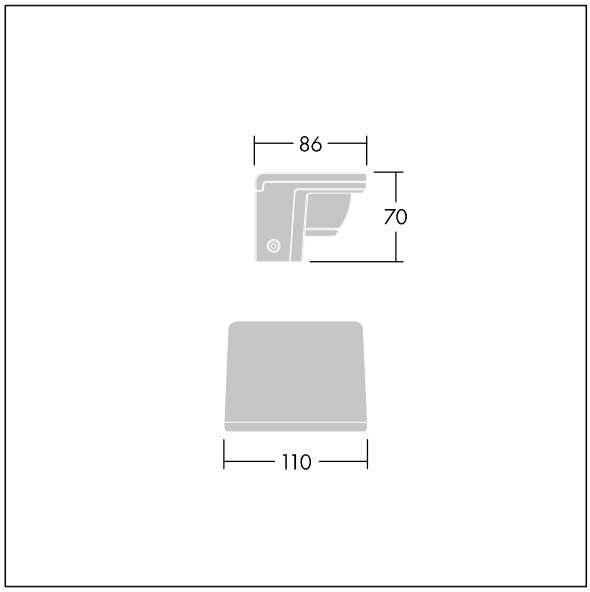

TLG_RAZA_M_S_MWA.wmf

This product contains a light source of energy efficiency class F.

All values marked with an * are rated values. Thorn uses tried and tested components from leading suppliers, however there may be isolated instances of technology-related failures of individual LEDs during the rated product lifetime. International standards set the tolerance in initial flux and connected load at ±10%. Unless stated otherwise, the values apply to an ambient temperature of 25°C.

Thorn Lighting is constantly developing and improving its products. The right is reserved to change specifications without prior notification or public announcement.
© Thorn Lighting