THORN

96634340 <HIPAK LED25000-840 HF RK GEN3 HE

IP65	D	IK08				850°C	T_a -30 +50	

An IP65 single point suspension LED high bay luminaire with rack beam optic. LED driver, for 220-240V, 50/60Hz supply. Class I electrical. IK08. Housing: die-cast aluminium. Lens/Diffuser: polycarbonate. Equipped with quick fit electrical connection. Complete with 4000K LED.

Dimensions: Ø380 x 147 mm
Luminaire input power: 160 W
Luminaire luminous flux: 25127 lm
Luminaire efficacy: 157 lm/W
Weight: 4.8 kg

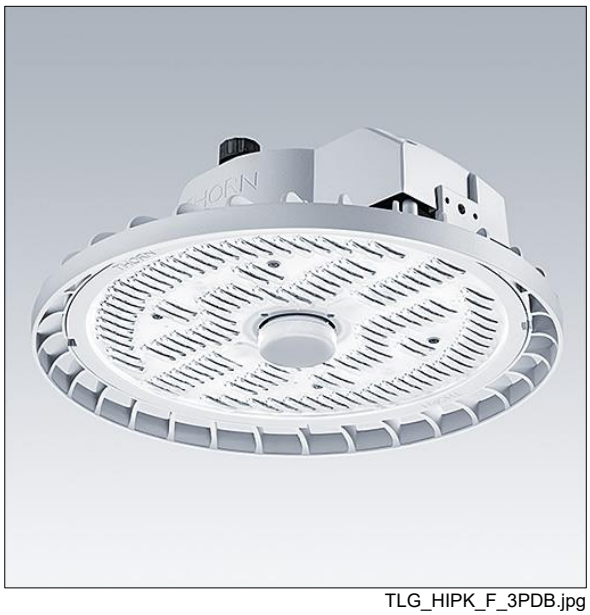

TLG_HIPK_F_3PDB.jpg

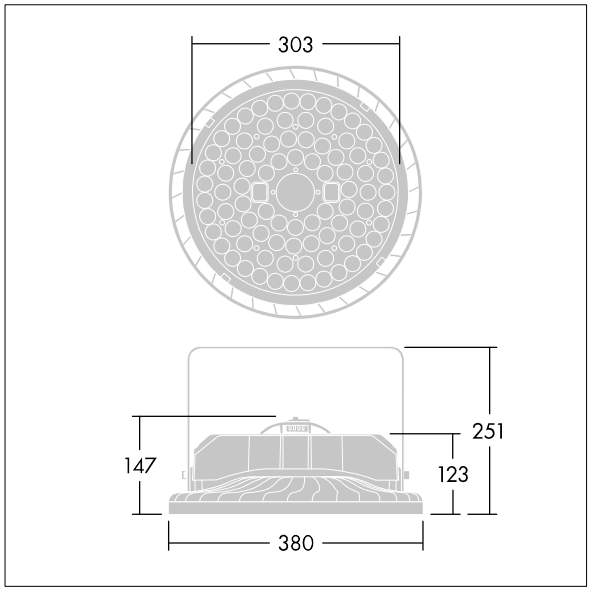

TLG_HIPK_M_3L.wmf

This product contains a light source of energy efficiency class D.

All values marked with an * are rated values. Thorn uses tried and tested components from leading suppliers, however there may be isolated instances of technology-related failures of individual LEDs during the rated product lifetime. International standards set the tolerance in initial flux and connected load at ±10%. Unless stated otherwise, the values apply to an ambient temperature of 25°C.

Thorn Lighting is constantly developing and improving its products. The right is reserved to change specifications without prior notification or public announcement.
© Thorn Lighting