WeatherForce

96650057 WF G2 LED2500 830-57 L6 HFI E2

RoHS	T_a 0 +40	IP65	IK08					750°C	

WeatherForce

A wide body, linear, water resistant LED luminaire, specifically designed for general outdoor applications. DALI dimmable LED driver with 2 hour, manual test, emergency lighting circuit. Class I electrical, IP65, Impact strength: IK08. Body: light grey injection moulded polycarbonate, supplied with tamper resistant screws. Diffuser: opal polycarbonate. Gear Tray: sheet steel, powder coated white. WeatherForce G2 is able to be surface mounted or suspended. Complete with switchable light colour temperature 3000K - 4000K - 5700K LED.

Emergency classification in accordance with AS/NZS 2293, C0 = D50, C90 = D32

Dimensions: 660 x 150 x 110 mm
Luminaire input power: 26 W
Weight: 1.93 kg

TLG_WFG2_F_L6.jpg

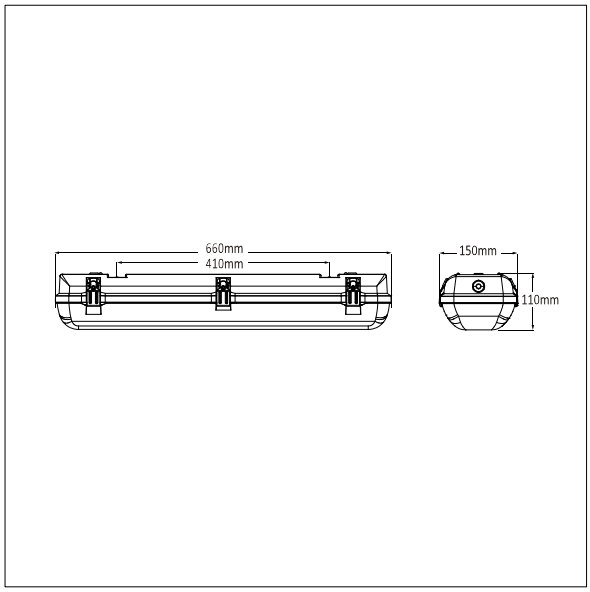

TLG_WFG2_M_L6.wmf

All values marked with an * are rated values. Thorn uses tried and tested components from leading suppliers, however there may be isolated instances of technology-related failures of individual LEDs during the rated product lifetime. International standards set the tolerance in initial flux and connected load at ±10%. Unless stated otherwise, the values apply to an ambient temperature of 25°C.

Thorn Lighting is constantly developing and improving its products. The right is reserved to change specifications without prior notification or public announcement.
© Thorn Lighting

WeatherForce

96650057 WF G2 LED2500 830-57 L6 HFI E2

Thorn Lighting is constantly developing and improving its products. The right is reserved to change specifications without prior notification or public announcement.
© Thorn Lighting